A tale of 3 dreams

Declarative Amsterdam, 13 November 2026

Geert Bormans (geert@c-moria.com)

C-MORIA
<XML and Linked Data Solutions />

A word about me

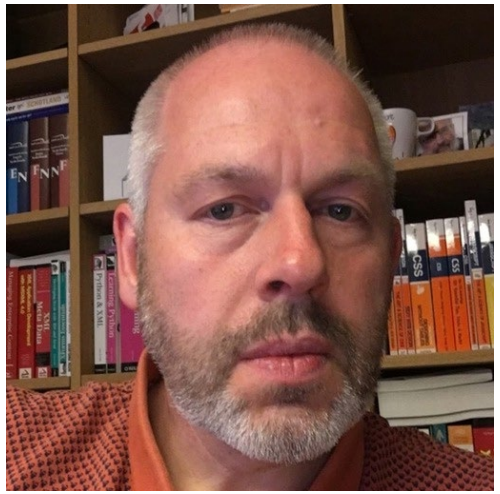

Geert Bormans

knowsAbout

Markup (XML), Semantic Web tech;

memberOf

C-Moria, MarkupUK, WCG Xproc Next.

C-MORIA
<XML and Linked Data Solutions />

Let’s discuss the things I need…

Title slides with subtitle

C-MORIA
<XML and Linked Data Solutions />

This would be the maximum I put in text

Max 3 or 4 main bullets, max depth 2 levels, small intro line

- Pipeline Coordination
  - define a sequence of operations
- Heterogeneous Tooling
  - orchestrate different technologies: fetch via HTTP; validate; transform; unarchive; save to disk; generate PDF
- Data Flow Management (Provide complex routing)
  - split a data stream to perform parallel operations
  - merge multiple documents together

In comes XProc 3.1

Now we are talking….

C-MORIA
<XML and Linked Data Solutions />

What is Xproc 3

- An XML Pipeline specifies a sequence of operations to be performed on a collection of input documents.
- Pipelines take documents (XML, JSON, text, images, etc.) as their input and produce documents as their output.
- A pipeline consists of steps.
- Like pipelines, steps take documents as their inputs and produce documents as their outputs.

Source: https://spec.xproc.org/3.1/xproc/

C-MORIA
<XML and Linked Data Solutions />

What is Xproc 3 (very schematic)

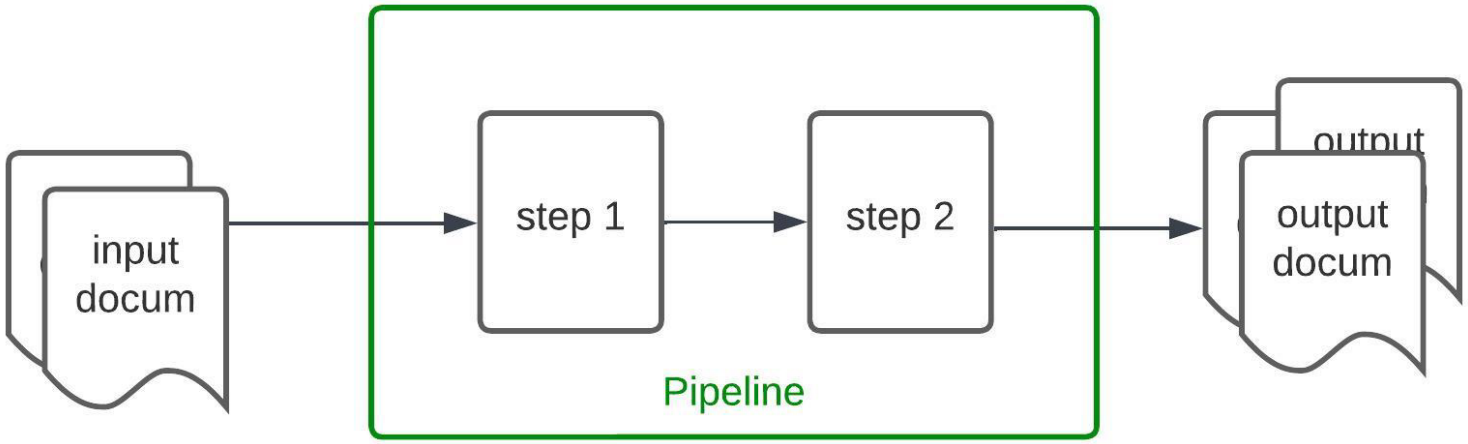

C-MORIA
<XML and Linked Data Solutions />

Worst case schematics

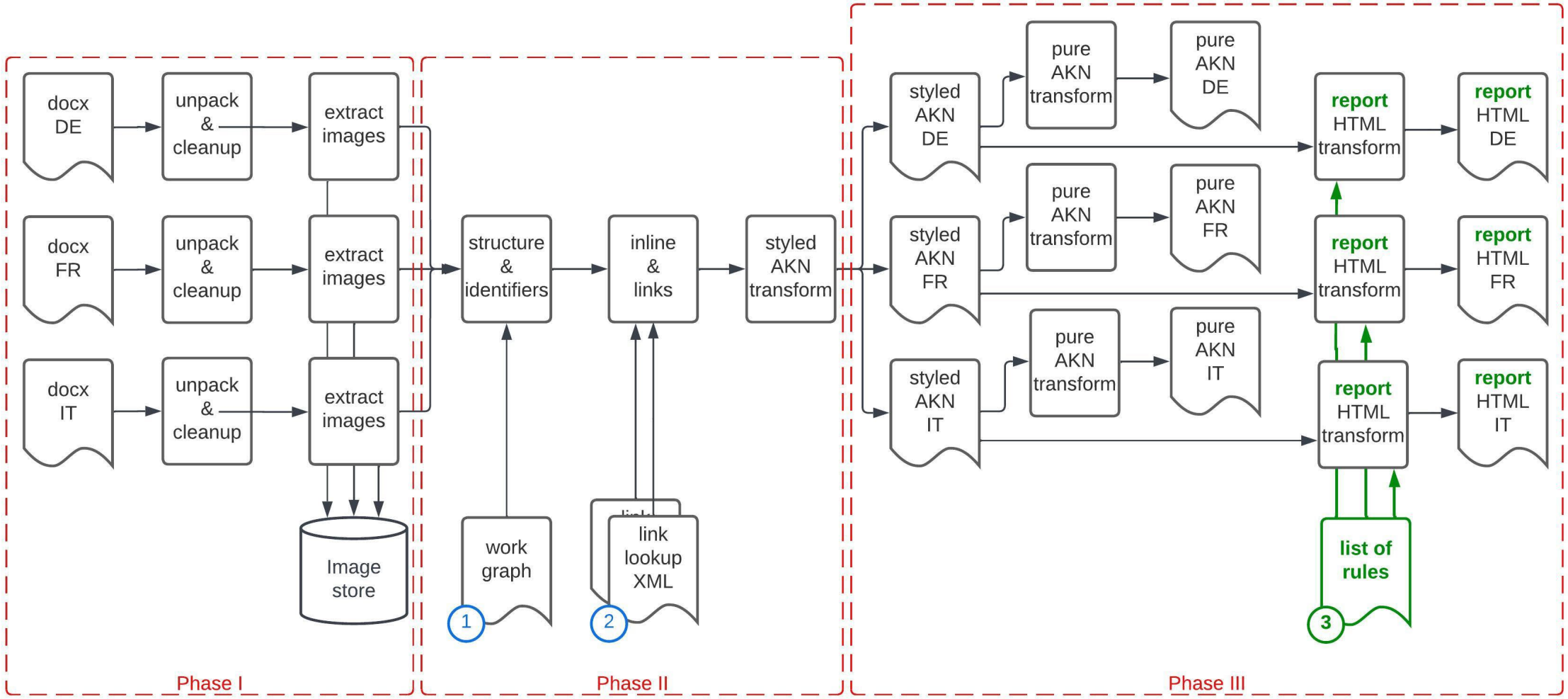

Code would be like this

```
<p:declare-step
    xmlns:p="http://www.w3.org/ns/xproc"
    xmlns:c="http://www.w3.org/ns/xproc-step" version="3.1">
    <p:input port="source"/>
    <p:output port="result"/>
    <p:identity/>
</p:declare-step>
```

C-MORIA
<XML and Linked Data Solutions />

Code would more like this

```
<p:wrap
    match="/recordCollection/albums/album"
    wrapper="my-album-wrapper"
    attributes="map{'favorite' : 'yes', 'new-id' : generate-id()}"
/>
```





C-MORIA
<XML and Linked Data Solutions />

This is stretching it, awaiting suggestions

```xml
<artists>
    <conductor>Sir Georg Solti</conductor>
    <ensemble role="Orchestra">Chicago Symphony Orchestra</ensemble>
    <solorist instrument="Piano">András Schiff</solorist>
</artists>
```

```
<p:wrap
    match="//artists/*"
    wrapper="artist-group"
    group-adjacent="if(self::conductor | self::ensemble)
                    then(true())
                    else(false())"
/>
```



```xml
<artists>
    <artist-group>
        <conductor>Sir Georg Solti</conductor>
        <ensemble role="Orchestra">Chicago Symphony Orchestra</ensemble>
    </artist-group>
    <artist-group>
        <solorist instrument="Piano">András Schiff</solorist>
    </artist-group>
</artists>
```

C-MORIA
<XML and Linked Data Solutions />

Thank you!

geert@c-moria.com

C-MORIA
<XML and Linked Data Solutions />